GUIDELINES FOR THE APPLICATION OF THE 2017 FINNISH-SWEDISH ICE CLASS RULES

TRAFI/708629/03.04.01.01/2018
Helsinki, 1 December 2018

This document supersedes the November 2017 version.

Major changes since the last version are highlighted in red. If a whole section or sub-section has been added, only the title has been highlighted.

Major changes since the November 2017 version

- New section 3.3 "Information needed for confirming a Finnish-Swedish ice class"
- New text added to section 4, "The purpose and scope of the rules" to clarify the aims and assumptions of the rules
- New subsections in section 10, "Propulsion machinery", and subsequent renumbering of subsections. Subsections 10.1, 10.3, 10.4 and 10.6 are new. Previous subsections 10.1, 10.2, 10.3, 10.4 and 10.5 have been renumbered as 10.2, 10.5, 10.7, 10.8 and 10.9 respectively.

Table of Contents

1 Introduction ... 6
2 The Status of the Guidelines ... 6
3 Implementation of the Finnish-Swedish Ice Class Rules in Finland and Sweden ... 6
3.1 Implementation of the Finnish-Swedish Ice Class Rules in Finland ... 7
3.1.1 Ice Class Certificate of Trafi ... 7
3.2 Implementation of the Finnish-Swedish Ice Class Rules in Sweden ... 8
3.3 Information needed for confirming a Finnish-Swedish ice class ... 8
4 The purpose and scope of the rules ... 8
4.1 Design Philosophy ... 9
5 General (Chapter 1 of the Rules) ... 11
5.1 Ice Classes ... 11
6 Ice Class Draught (Chapter 2 of the Rules) ... 11
7 Engine Output (Chapter 3 of the Rules) ... 12
7.1 Definitions (Section 3.2.1 of the Rules) ... 12
7.2 Existing Ships of Ice Class IB or IC (Section 3.2.3 of the Rules) ... 13
7.3 On the Selection of the Propulsion System ... 13
7.4 Other Methods of Determining K_e or R_{CH} ... 14
8 Hull Structural Design (Chapter 4 of the Rules) ... 15
8.1 Frame Connections ... 15
8.2 Vertical Extension of Ice Strengthening of Framing (Section 4.4.1 of the Rules) 19
8.3 Inclined or Unsymmetrical Frame Profiles (Section 4.4.4.2 in the Rules) ... 19
8.4 Section modulus and shear area ... 20
8.5 Arrangements for Towing ... 21
8.6 Reduction in Corrosion Allowance (Section 4.3.2 of the Rules) ... 25
8.7 Propeller Clearance ... 26
8.8 Transom Stern ... 26
8.9 Bilge Keels ... 27
9 Rudder and steering arrangements (Chapter 5 of the Rules) ... 28
9.1 Ice Knife ... 28
9.2 Rudder Turning Mechanism ... 28
9.3 Bow Thrusters ... 29
10 Propulsion Machinery (Chapter 6 of the Rules) ... 29

10.1 Time domain calculation of torsional response (section 6.5.3.4.1 of the rules). 29

10.2 Calculation of blade failure load and the related spindle torque with elastic-plastic FEM (section 6.5.4.1 and 6.5.4.2 of the rules) 29

10.3 Safety valves fitted to azimuthing main propulsor units (sections 6.6.5.1 and 6.6.5.2 of the rules)..... 30

10.4 Acceptability criterion for static loads (section 6.6.5.4 of the rules) 30

10.5 Extreme ice impact loads on azimuthing main propulsors (section 6.6.5.2 of the rules) 31

10.6 Extreme ice ridge loads on azimuthing main propulsors (section 6.6.5.3 of the rules) 32

10.7 Fatigue design and acceptability criterion for fatigue for azimuthing main propulsors 32

10.8 Simplified methodology for estimation of once in a lifetime vibratory loads on the azimuthing thruster (Section 6.6.5.5 of the Rules)..... 32

10.9 Local ice pressure on azimuthing thruster..... 36

11 Miscellaneous Machinery Requirements (Chapter 7 of the rules)..... 36

11.1 Sea Inlet and Cooling Water Systems 36

12 General Suitability for Winter Conditions 36

12.1 Low Ambient Temperature 36

Appendices

Appendix 1. Instructions for the application of a letter of compliance

Appendix 2. Guidelines for the calculation of propeller thrust for open and nozzle propellers

Appendix 3. Guidelines for bollard pull tests for determining the thrust of the propeller(s)

Appendix 4. Guidelines for the verification of a ship's performance for ice classes through model tests

References

- Finnish-Swedish Ice Class Rules, 2017 (TRAFI/494131/03.04.01.00/2016)
- The Equivalence between the Finnish-Swedish Ice Classes and Ice Classes of Classification Societies (TRAFI/383804/03.04.01.00/2016)
- Transportstyrelsens föreskrifter och allmänna råd om finsk-svensk isklass, TSFS 2009:111
- Act on the Ice Classes of Ships and Icebreaker Assistance (1121/2005) and Act on Fairway Dues (1122/2005), as amended.

1 Introduction

The Finnish-Swedish Ice class Rules and Finnish legislation are available from Trafi's website. The Finnish Transport Safety Agency (Trafi) and the Swedish Transport Agency (STA) have developed the Finnish-Swedish Ice Class Rules in co-operation with classification societies. The development of the rules began as early as the 1930s. The rules have been amended several times during the past years, for example in 1971 and 1985, 1999, 2003, 2010 and the latest version was published in 2017. Most of the members of the International Association of Classification Societies (IACS) have adopted the Finnish-Swedish ice class rules and incorporated them in their own regulations on the classification of ships.

The purpose of these Guidelines is to provide classification societies, ship designers and shipyards with background information on the ideas behind the rules, to provide a harmonised interpretation for the implementation of certain parts of the rules, and to provide guidance on certain aspects of the winterisation of ships, which are not covered by the rules.

These Guidelines will be updated when needed and published on the websites of Trafi and the STA.

2 The Status of the Guidelines

In general, Trafi and the STA accept class approval, based on these Guidelines, for the design of vessels. The approval of Trafi or the STA is required for the engine power of a vessel if the engine power is determined using model tests or by means other than the formulae given in regulations 3.2.2 and 3.2.4 of the Finnish-Swedish Ice Class Rules. Instructions for the application of a letter of compliance are given in Appendix 1. Model tests performed for vessels contracted for construction on or after 1 January 2012 should be completed according to these Guidelines.

These Guidelines replace all Guidelines previously issued by Trafi or by the STA.

3 Implementation of the Finnish-Swedish Ice Class Rules in Finland and Sweden

The Finnish and Swedish administrations provide icebreaker assistance to ships bound for ports in these two countries during the winter season. Depending on the ice conditions, The Finnish Transport Agency (FTA) enforces restrictions with regard to the size and ice class of ships entitled to icebreaker assistance. Winter traffic restrictions on ships are set in order to ensure smooth winter navigation and the safety of navigation in ice. Assistance for ships with

inadequate engine output or ice strengthening would be both difficult and time-consuming. It would also be unsafe to expose such vessels to ice loads and ice pressure.

FTA and SMA update traffic restrictions to Finnish and Swedish ports respectively during the winter period, depending on the ice conditions. A typical maximum traffic restriction on ships bound for Finnish ports in the eastern Gulf of Finland is at least ice class IA and a minimum deadweight of 2,000 TDW. A typical strictest traffic restriction for the ports in the northern Bay of Bothnia is ice class IA and a minimum deadweight of 4,000 TDW. On the other hand, a lower minimum ice class is required for ships bound for ports on the southwestern coast of Finland, where the ice conditions are less difficult. A typical minimum requirement is ice class IC and a deadweight of 3,000 TDW.

3.1 Implementation of the Finnish-Swedish Ice Class Rules in Finland

Pursuant to section 12 of the Act on Fairway Dues (1122/2005 as amended by Acts1267/2007, 750/2008, 787/2008, 1257/2009 and 1309/2009), in 2017 the Finnish Transport Safety Agency adopted a regulation on the structural design and engine output required of ships for navigation in ice (TRAFI/494131/03.04.01.00/2016). The Act on the Ice Classes of Ships and Icebreaker Assistance was issued as Act 1121/2005.

Pursuant to section 12 of the Act on Fairway Dues (1122/2005), the Finnish Transport Safety Agency has confirmed the list of ice class notations of authorized classification societies and the equivalent Finnish-Swedish ice classes (TRAFI/383804/03.04.01.00/2016). The ice class of any ship, which has an ice class of a classification society, is determined in accordance with this regulation.

The Finnish Transport Agency is responsible for providing icebreaker assistance for ships entering Finnish ports, if the ice conditions so require. This assistance service is included in the fairway dues. The Finnish Transport Agency sets traffic restrictions for ships, depending on the ice conditions (see www.liikennevirasto.fi). Finnish icebreakers only assist ships that meet the ice class requirements set out in the Finnish-Swedish Ice Class Rules 2017

The fairway dues imposed on a ship entering a Finnish port depend on the ice class of the vessel in accordance with the Government Decree on Fairway Dues (1122/2005). (See www.finlex.fi)

3.1.1 Ice Class Certificate of Trafi

Since 1 January 2006, Ice Class Certificates have no longer been issued in Finnish ports by the inspectors of the Finnish Transport Safety Agency. The Ice Class of a ship will be determined based on its Classification Certificate.

3.2 Implementation of the Finnish-Swedish Ice Class Rules in Sweden

The STA is responsible for providing icebreaker assistance for ships entering Swedish ports. This assistance service is free of charge. The STA sets traffic restrictions for ships, depending on the ice conditions.

Swedish icebreakers only assist ships that meet the Finnish-Swedish ice class rules. Sweden applies the same equivalencies to the Finnish-Swedish ice classes as Finland. The STA does not issue ice class certificates, but the ice class is based on the Classification Certificates of ships.

3.3 Information needed for confirming a Finnish-Swedish ice class

Both Finnish and Swedish authorities determine the Finnish-Swedish ice class of a vessel based on the Classification Certificate of the vessel. As icebreaker assistance is given free of charge to vessels fulfilling the ice class requirements for a given time and port, it is important that the authorities have sufficient information about the ice class of the vessel. The minimum and maximum ice class draughts fore, amidships and aft are needed for the icebreaker crews to ascertain that vessels are loaded safely for traffic in ice. The minimum power requirement is important to ascertain that the vessel has sufficient capability for operating in ice.

A vessel may be denied icebreaker assistance if the required information for determining a Finnish-Swedish ice class is not available. If this information can be found on the Classification Certificate or on an annex to the Classification Certificate, it will ensure that the Finnish-Swedish ice class of the vessel can be confirmed without delay.

Vessels of Finnish-Swedish ice class IA Super and IA, which have had their keel laying on 1 September 2003 or before, shall fulfil the machinery power requirements of the current FSICR in order to retain their Finnish-Swedish ice class from 1 January of the year on which 20 years have elapsed since their commissioning. The new machinery power requirement will be confirmed for each ship separately by the Finnish and Swedish authorities. If it is stated on the Classification Certificate or its annex that the power requirement is calculated according to the current FSICR, no further confirmation is needed.

4 The purpose and scope of the rules

The Finnish-Swedish Ice Class Rules are primarily intended for the design of merchant ships trading in the Northern Baltic in winter. The rules primarily address matters directly relevant to the capability of a ship to advance in ice. The regulations for minimum engine output (Chapter 3 of the Rules) can be considered regulations of an operational type. Ships are required to have a certain speed in a brash ice channel, in order to ensure the smooth progress of traffic in ice conditions. The regulations for strengthening the hull, rudder, propellers, shafts and gears (Chapters 4 to 6 of the Rules) are clearly related to the safety of navigation in ice. In principle, all parts of the hull and the propulsion machinery exposed to ice loads must be ice-strengthened.

The rules implicitly assume that ice classed ships are at least about 2,000 TDW as this is the minimum deadweight for ships given ice breaker assistance in the case a deadweight limit is set. Smaller ships can be designed according to the rules but some of the requirements may not be practical for very small vessels. The rules are meant for the design of cargo and passenger vessels and other types of vessels such as tugs and icebreaking supply vessels are not explicitly taken into account.

Finnish and Swedish ice classes are determined solely for determining which ships are eligible for ice-breaker assistance to Finnish and Swedish ports and to determine the fairway dues for ships calling to Finnish ports.

4.1 Design Philosophy

The Finnish-Swedish Ice Class Rules are intended for the design of merchant ships operating in first-year ice conditions during part of the year. In most cases, compromises have to be made when ships are designed for both open water and ice conditions. The basic philosophy underlying the rules is to require a certain minimum engine power for ships in any ice class, for operational reasons. However, no general requirements have been set for the hull form. The structural strength of the hull and the propulsion machinery should be able to withstand ice loads, with a minimum safety margin. For economic reasons, excessive ice strengthening is avoided.

The Finnish-Swedish Ice Class Rules set the minimum requirements for engine power and ice strengthening for ships based on the assumption that icebreaker assistance is available when required. Special consideration should be given to ships designed for independent navigation in ice, or for ships designed for navigation in sea areas other than the Baltic Sea.

The design points for hull and propulsion machinery, as well as for the ice performance (propulsion power), are all different. This reflects the fact that different ice conditions in different ship operations form the critical design situations. The design points are as follows:

Item	Design point in FSICR	Description of the design point
Hull	Impact with level ice of thickness h_0	The ship can encounter thick level ice in ridges where the consolidated layer can be 80% thicker than the level ice thickness. Channel edges can also be very thick.
Propulsion machinery	Impact with large ice floes of thickness H_{ice}	Propellers encounter only broken ice and the design scenario involves an impact with these floes. Large ice floes can be encountered among level ice floes, for example in old channels.
Propulsion power	Ship must make at least 5 knots in a brash ice channel of thickness H_M	Ships must be able to follow icebreakers at a reasonable speed and proceed independently in old brash ice channels at reasonable speeds.

4.1.1 The Engine Power Regulations

The regulations for minimum engine output are based on long term experience of Finnish and Swedish icebreaker assistance in the northern Baltic Sea area. The number of icebreakers is limited, and they must be able to assist all ships entering or leaving winter ports. Thus, the minimum engine power requirement is "a matter of definition" to be decided by the Maritime Authorities depending on the number of icebreakers, the number of ships in need of assistance, the ice conditions, and the maximum waiting time for icebreaker assistance. In Finland, the maximum average waiting time for icebreaker assistance is defined as about four hours.

The principle underlying the winter navigation system is that all ships meeting the traffic restrictions are given icebreaker assistance. An ice-classed ship is assisted by an icebreaker when the ship is stuck in ice or is in need of assistance, because her speed has substantially decreased. Normally, the ship is assisted to (or from) the fairway entrance after which the ship should be able to sail into port on its own (or sail out of the port on its own), although the icebreaker often has to escort smaller ships, in particular, into the port. Most of the fairways leading to Finnish coastal ports are routed through the archipelago area. In archipelago areas, the ice cover is stationary. The engine power requirements included in the rules have been developed for navigation in brash ice channels in archipelago areas, at a minimum speed of 5 knots. Thus, it should not be assumed that mere compliance with these regulations guarantees a certain degree of capability to advance in ice without icebreaker assistance, or to withstand heavy ice compression in the open sea, where the ice field may move due to high wind speeds. It should be also noted that the ice-going capacity of small ships may be somewhat lower than that of larger ships in the same ice class. This observation, which is based on the experience of icebreaker operators, may be partly attributed to the beneficial effect of greater inertia during ice going.

4.1.2 Hull Structural Design

The rules for the structural design of hulls (Chapter 3 of the Rules) deal with the local strength of the hull (plating, frames, stringers and web frames). The ice loads given in the Rules have been determined based on measurements taken on ships that sail in the Baltic Sea in winter. The rules do not take account of a situation where a ship is stuck in compressive and/or moving ice and large ice forces are acting on the parallel midbody. It is assumed that icebreaker assistance is available in such cases, leaving no time for a serious compressive situation to develop. However, in the experience of the Administrations, vessels strengthened to ice classes IA and IA Super are rarely damaged in compressive ice situations. Ice damage on the midbody of ships in ice class IC has been observed in recent years.

Recent observations of ice damage on ice-strengthened vessels indicate that most of the damage on hulls occurs at an early stage of the winter season. These ships are probably operated at high speed on the open sea when the ice coverage is less than 100%. Damage to the hull may therefore occur when the vessel hits an ice floe at high speed.

4.1.3 Propeller, Shafts and Gears

The "pyramid strength" principle, i.e. the hierarchical strength principle has been adopted for the design of propulsion systems. This means that the propeller blades are the weakest

element in the propulsion train and the strength increases towards the main engine or propulsion motor.

Recent observations of ice damage on ice-strengthened vessels indicate that most damage to propellers occurs at a later stage of the winter season than damage occurring on the hull. Obviously, thick ice blocks place the largest loads on propellers.

4.1.4 Application of the Rules on the Design of Ships for Other Sea Areas

If the Finnish-Swedish Ice Class Rules are applied to the design of ships for other sea areas, the following issues should be taken into consideration:

- The Finnish- Swedish Ice Class Rules have been developed for first year ice conditions with a maximum level ice thickness of 1.0m, an ice bending strength (cantilever beam test) of about 500kPa and a maximum compressive strength of sea ice of around 5MPa.
- Consideration should be taken of ice compression in the sea area.
- There is no ocean swell in the Baltic Sea. The vertical extension of the ice belt in the bow area may therefore not be adequate, if the vessel is operated in an area with high swell and floating ice.

5 General (Chapter 1 of the Rules)

5.1 Ice Classes

Ships in ice class IA Super are intended for year round operation in the Baltic Sea areaand the Administrations do not set traffic restrictions for this ice class. Ships in ice class IA are intended for year-round operation in the Baltic Sea area, and are escorted if necessary.

Ships in ice class IB or IC may have limited access to Finnish and Swedish ports for part of the year, depending on the ice conditions.

Ships belonging to ice classes II and III are not strengthened for navigation in ice. Traffic restrictions based on ice class, deadweight and possibly power are given according to ice conditions. In Finland, the fairway dues depend on the ice class of the vessel, for which reason “ice classes” II and III are used.

6 Ice Class Draught (Chapter 2 of the Rules)

The UIWL and LIWL waterlines may be broken lines, as these are the envelopes of all permitted load situations. The forward design draught should never be less than the draught amidships. The same draught used for calculating the minimum engine power of the ship (see paragraph 3.2.2 of the Rules), should be used in determining the vertical extension of ice strengthening (see 4.3.1 and 4.4.1 of the Rules).

It is recommended that, at the design stage, some reserve is allowed for the ice class draughts UIWL and LIWL. If this is done, the engine power of the vessel, as well as the vertical extension of the ice belt, will continue to fulfil the rule requirements in the future, if the UIWL draught of the ship is increased or the LIWL draught is decreased when the ship is in operation. It should be checked, that the ballast capacity is sufficient to ballast the ship to the draught and trim required by the LIWL.

It has been observed that ships in light load condition require more icebreaker assistance than in their fully loaded condition. Thus, ships should always be operated so that the waterline is between UIWL and LIWL, preferably closer to UIWL. Consideration should also be given to operating with the deepest possible propeller submergence.

7 Engine Output (Chapter 3 of the Rules)

7.1 Definitions (Section 3.2.1 of the Rules)

The length of the bow (L_{BOW}) should be measured between the forward border of the side where the waterlines are parallel to the centreline and the fore perpendicular at UIWL. The same perpendicular should also be used when calculating the length of the bow at LIWL.

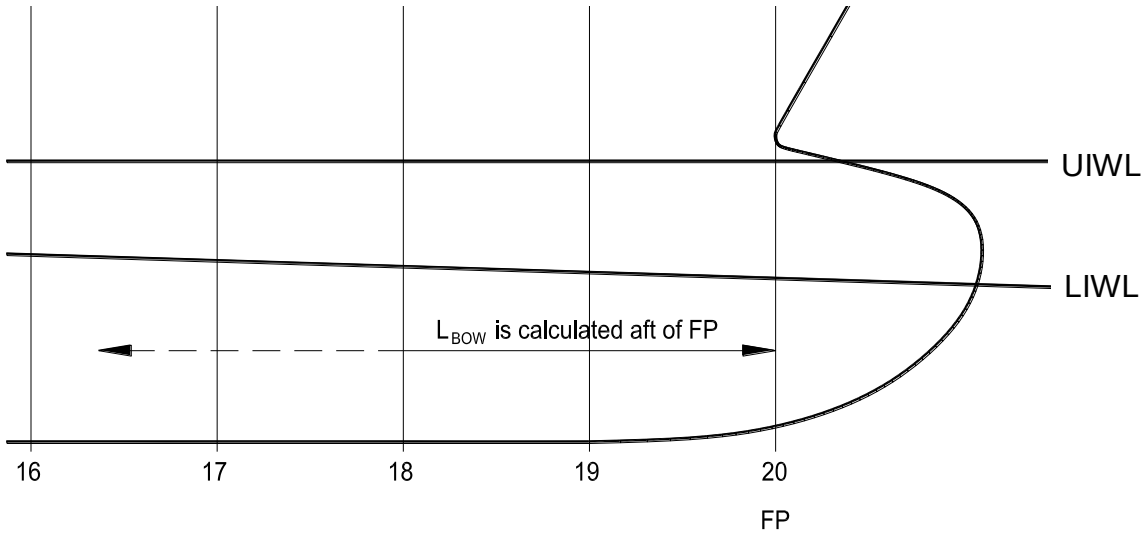

Figure 1. Measurement of the length of the bow.

The length of the parallel midship (L_{PAR}) should be measured from the aft perpendicular if the section of the side where the waterlines are parallel to the centreline extends aft of the aft perpendicular.

No negative values of the rake of the bow at B/4 (φ_2) should be used in the calculations. If the rake of the bow has a negative value, as presented in Figure 2 below, 90 degrees should be used in the calculations.

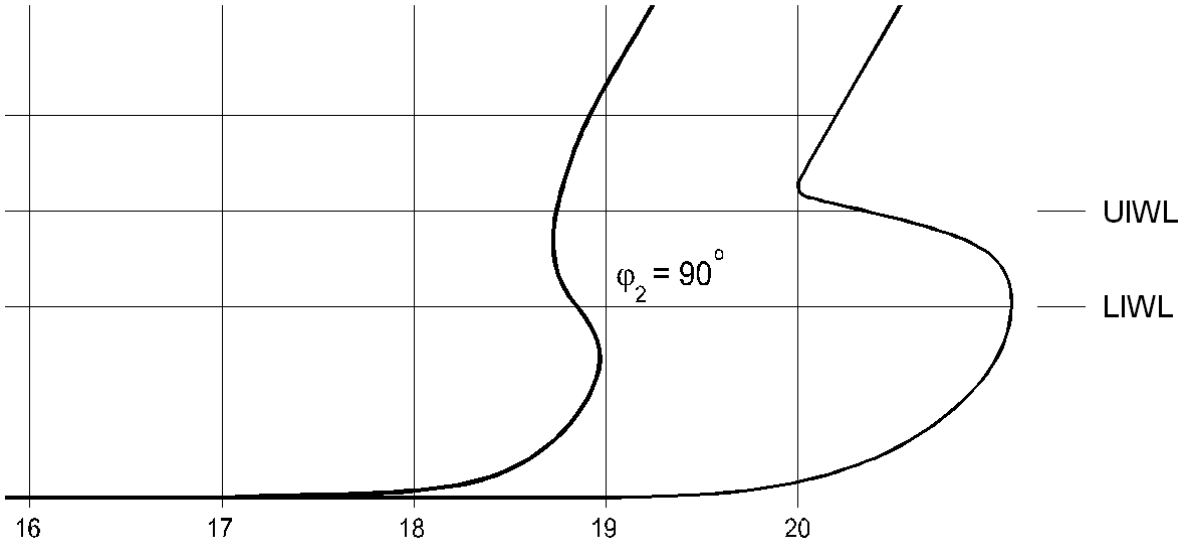

Figure 2. Determination of the angle φ_2.

7.2 Existing Ships of Ice Class IB or IC (Section 3.2.3 of the Rules)

To be entitled to retain ice class IB or IC, a ship, the keel of which has been laid or which has been at a similar stage of construction on or after 1 November 1986, but before 1 September 2003, should comply with the requirements of Chapter 3 of the ice class regulations of 1985 (2.9.1985, No. 2575/85/307), as amended. If the owner of the ship so requests, the required minimum engine power can be determined in accordance with the ice class regulations of 2017.

To be entitled to retain ice class IB or IC, a ship, the keel of which has been laid or which has been at a similar stage of construction before 1 November 1986, should comply with regulation 3 of the ice class regulations of 1971 (Board of Navigation Rules for Assigning Ships Separate Ice-Due Classes, issued on 6 April1971), as amended. If the owner of the ship so requests, the required minimum engine power can be determined in accordance with the ice class regulations of 1985 or 2017.

7.3 On the Selection of the Propulsion System

The following machinery systems are used in ice-going ships:

- Diesel – electric propulsion system;
- Medium speed diesel and gearbox;
- Low-speed diesel with direct shaft.

The propulsors may include:

- Controllable pitch or fixed pitch propellers;
- Contra-rotating and tandem propellers in the azimuths
- Podded or azimuthing propulsors;

A diesel-electric (or steam/gas turbine-electric) propulsion system is very common in icebreakers, but not in merchant vessels. It provides very efficient propulsion characteristics

at slow speed and excellent manoeuvring characteristics, but due to its high cost it is very seldom used in merchant vessels. The capability for fast load and direction changes, the ability to maintain RPM and good reversing capability are the characteristics of good propulsion systems in ice.

A propulsion system with a medium-speed engine, a gearbox and a controllable pitch (CP) propeller is the most common propulsion system used in merchant vessels with an ice class. This provides reasonable propulsion characteristics at slow speed, as well as reasonable manoeuvring characteristics.

A direct driven diesel engine with a fixed pitch propeller provides poor propeller thrust at a low ship speed. It is recommended that a controllable pitch propeller be installed on ships with a direct driven diesel engine propulsion system.

7.4 Other Methods of Determining K_e or R_{CH}

According to section 3.2.5 *"for an individual ship, in lieu of the K_e or R_{CH} values defined in 3.2.2 and 3.2.3, the use of K_e or R_{CH} values based on more exact calculations or values based on model tests may be approved"*. Guidelines on these issues are given in the following paragraphs.

If R_{CH} is determined using the rule formulae, then K_e can be determined by using direct calculations or the rule formulae. However, if R_{CH} is determined using model tests then propeller thrust should be calculated by direct calculations using the actual propeller data, instead of using the rule formulae. The reason for this is the need to ensure that the propulsion system is able to produce the required thrust to overcome the channel resistance. It should be noted that the total resistance in ice, R_{iTOT}, is the sum of open water resistance R_{OW} and ice resistance R_{CH} i.e. $R_{iTOT} = R_{OW} + R_{CH}$ where the ice resistance R_{CH} is given in the ice class rules, eq. (3.2).

7.4.1 Other Methods of Determining K_e

One of the drawbacks of the Rule equations for power is that open water resistance is included in a very approximate fashion (the net thrust i.e. the thrust available for overcoming the ice resistance at 5 knots is assumed to be $0.8T_B$). This is not correct, as open water and ice resistance are unrelated in the case of the various ice thicknesses related to each ice class. A brief study of the open water and channel resistance of typical ships in different ice classes has led to the proposal of a regression formula whose results are given in Table 2.

The calculation of the thrust of nozzle propellers is not dealt with in the text of the current rules. Please refer to Appendix 2 for guidelines on the calculation of the propeller thrust for nozzle propellers and open propellers.

The thrust of the propellers can also be determined at full scale by bollard pull tests. Please refer to Appendix 3 for guidelines on bollard pull tests for determining the thrust of the propeller(s). A summary is presented in the table below.

Table 1. Summary of Appendices 2 & 3. "Actual value" means the value obtained from tests or calculations, as applicable.

Thrust > Factor * R_{CH}

	Calculation of Thrust	Bollard Pull Test	Bollard Tow Test 1	Bollard Tow Test 2
Speed (knots)	5	0	5	5
R_{CH}	rule formula	rule formula	rule formula	rule formula
R_{OW}	Table 2 or actual value*)	Table 2 or actual value	-	-
Thrust reduction factor	0.15 or actual value	-	-	-
J-factor	-	0.20 or actual value	-	-
Measuring accuracy	-	±2 %	±2 %	Winch gauge
Factor	Table 2	1.05 times Table 2 values	1.00	1.10

**) The actual value can be calculated using the frictional resistance coefficient* $C_f = 0.075 \cdot [\lg(Re/100)]^{-2}$ *increased by 50 % to account for the residual resistance coefficient; Re is the Reynolds number.*

Table 2. Factors referred to in Table 1.

Ice class	Direct shaft	Azimuthing thruster
IA Super	1.28	1.25
IA	1.32	1.29
IB	1.37	1.34
IC	1.45	1.42

7.4.2 Other Methods of Determining R_{CH}

The resistance of the vessel in a brash ice channel can be determined by model testing in an ice tank. For guidelines on ice model testing and model test reporting, please refer to Appendix 4.

8 Hull Structural Design (Chapter 4 of the Rules)

8.1 Frame Connections

Frame connections must transfer the loads stemming from the secondary members to primary structural members in the structural hierarchy. The maximum load transferred by the stringers

in the transverse framing system to the web frames is as follows (where p is the rule ice pressure and h the ice load height)

$$F = 1.8\, p \cdot h \cdot l$$

where l is the web frame spacing S in the transverse framing system; and by transverse or longitudinal frames to stringers (or deck strips) or web frames, respectively,

$$F = p \cdot h \cdot l$$

where l is the frame spacing s in a transverse framing system or longitudinal frame span l in a longitudinal framing system. These equations are based on the ice loads the frames are assumed to carry and on the fact that a safety factor of 1.8 is assumed in the stringer design. The connection must be designed with a capacity sufficient to carry at least this load, without exceeding the yield or buckling capacity of the structure. Particular attention should be paid to adequate stiffening of the connection between deep web frames and longitudinal stiffeners with large spacing. Examples of the appropriate connections are given in Figures 3a and 3b. The frame connection for a web frame, stringer, deck or deck strip should use a lug as shown in Fig. 3c. In higher ice classes, the distance of the lug from the shell plating (d in the Fig. 3c) should be zero i.e. the lug should also be attached to the shell. In such a case, the requirements of the applicable classification society should be followed.

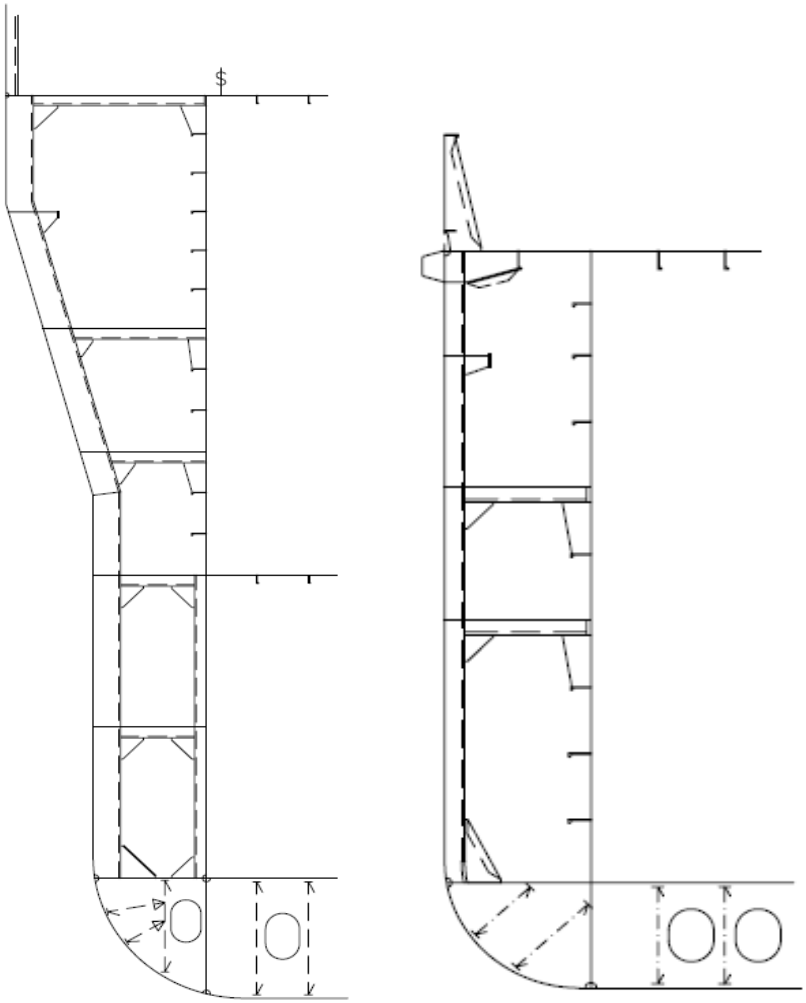

Figure 3a. Examples of frame connections.

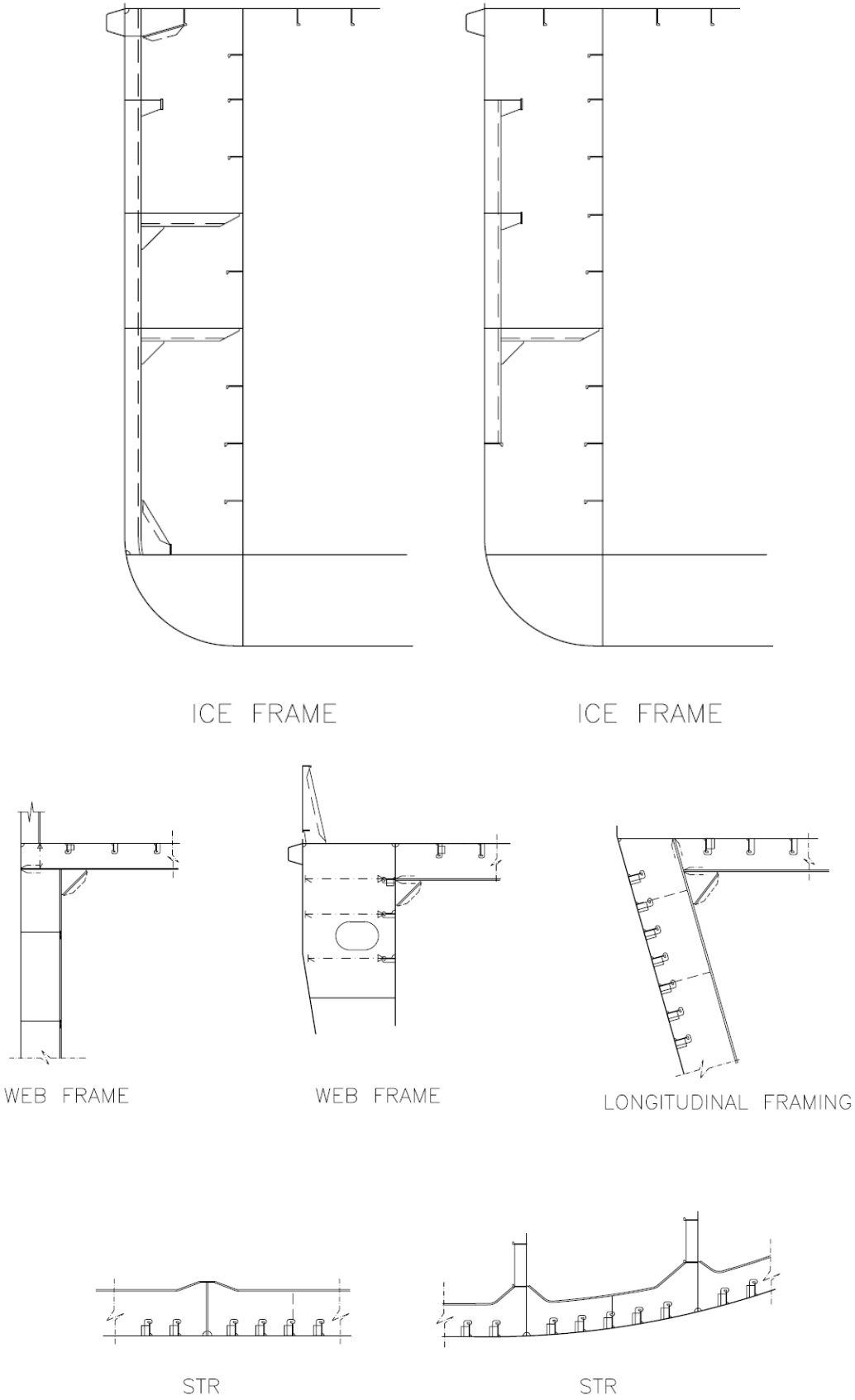

Figure 3b. Examples of frame connections.

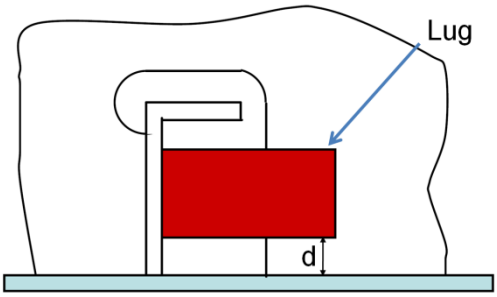

Fig. 3c. Construction of a frame connection using a lug.

8.2 Vertical Extension of Ice Strengthening of Framing (Section 4.4.1 of the Rules)

It is assumed that only the ice belt area (Area 1 in Figure 4), as defined in paragraph 4.3.1, will be directly exposed to ice contact and pressure. For this reason, the vertical extension of the ice strengthening of the longitudinal frames should be extended up to and including the next frame up from the upper edge of the ice belt (frame 3 in Figure 4). Additionally, the frame spacing of the longitudinal frames just above and below the edge of the ice belt should be the same as the frame spacing in the ice belt (the spacing between frames 2 and 3 should be the same as between frames 1 and 2 in Figure 4). If, however, the first frame in the area above the ice belt (frame 3 in area 2 in Figure 4) is closer than about *s*/2 to the edge of the ice belt, the same frame spacing as in the ice belt should be used above the edge of the ice belt i.e. in the spacing between frames 3 and 4 (where *s* is the frame spacing in the ice belt).

8.3 Inclined or Unsymmetrical Frame Profiles (Section 4.4.4.2 in the Rules)

Section 4.4.4.2 refers to the need for supporting frames that are 'not normal' or 'unsymmetrical' against tripping, but defines neither 'normal' nor 'symmetric'. For design purposes, the frame inclination, and the combined effects of the frame inclination and asymmetry on the principal axis of the frame, must be separately evaluated. Accordingly, if either the angle of the frame inclination or the principal axis of the frame (without attached plating) deviates more than 15° from normal to the plating, support against tripping is required. Please note that if the relevant classification society has its own standard for these limits, this must be followed.

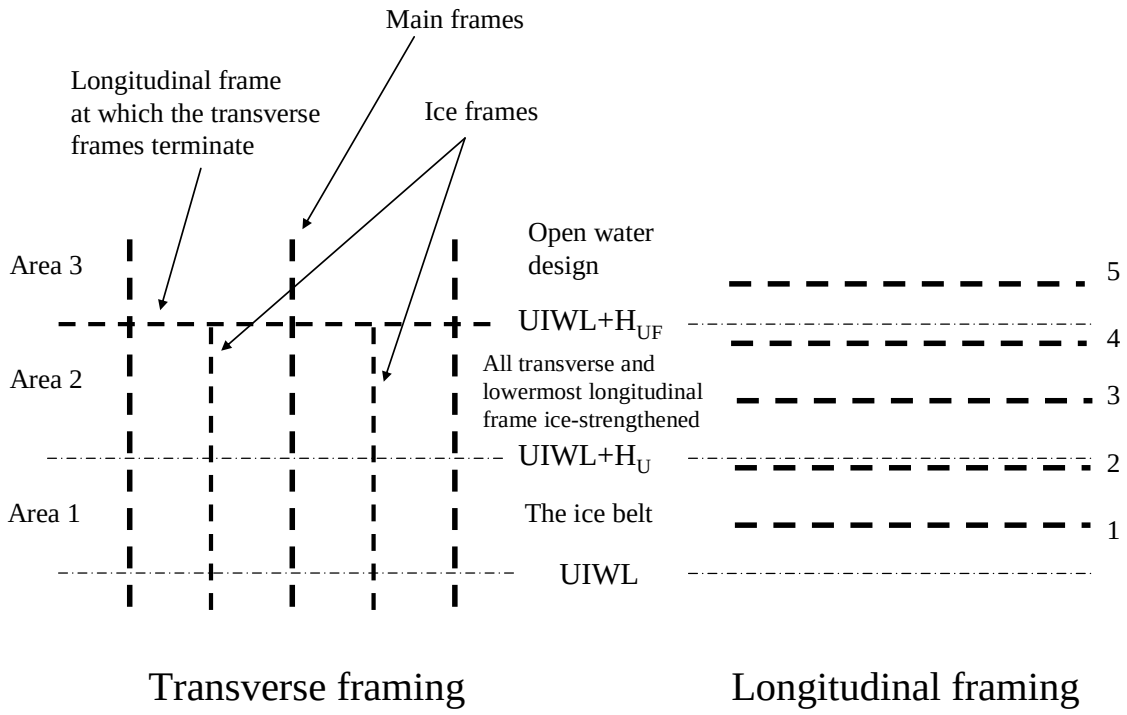

Figure 4. The different ice strengthening areas at and above the UIWL. The distances H_U and H_{UF} are specified in tables in 4.3.1 and 4.4.1, respectively (columns 'above UIWL'); these distances vary depending on the ice class.

8.4 Section modulus and shear area

Instead of using the formulae given in section 4.6.2 of the rules for the section modulus and shear area of web frames, a direct stress calculation may be performed to determine these.

In each case, the point of application of the concentrated load should be chosen in relation to the arrangement of stringers and longitudinal frames so as to obtain the maximum shear and bending moments. The allowable stresses are as follows:

Shear stress: $\tau = \sigma_y / \sqrt{3}$

Bending stress: $\sigma_b = \sigma_y$

Equivalent stress: $\sigma_c = \sqrt{\sigma_b^2 + 3\tau^2} = \sigma_y$

8.5 Arrangements for Towing

The towing method normally used in the Baltic by icebreakers is notch towing. Notch towing is often the most efficient way of assisting ships of moderate size (with a displacement not exceeding 30,000 tons) in ice. If the bulb or ice knife makes a ship unsuitable for notch towing, in heavy ice conditions this kind of ship may have to wait for the ice compression to diminish before the ship can be escorted without notch towing. During towage, the towed vessel acts like a large rudder for the icebreaker and this causes difficulties, particularly if the merchant vessel is loaded or the bow does not fit well with the notch.

The towing arrangement usually involves a thick wire, which is split into two slightly thinner wires, shown in Figure 5. Two fairleads must be fitted symmetrically off the centreline with one bollard each. The distance of the bollards from the centreline is approximately 3m. The bollards must be aligned with the fairleads, allowing the towlines to be fastened straight onto them. A typical towing arrangement is shown in Figure 5. The additional installation of a centreline fairlead is recommended, since this is still useful for many open water operations and some operations in ice.

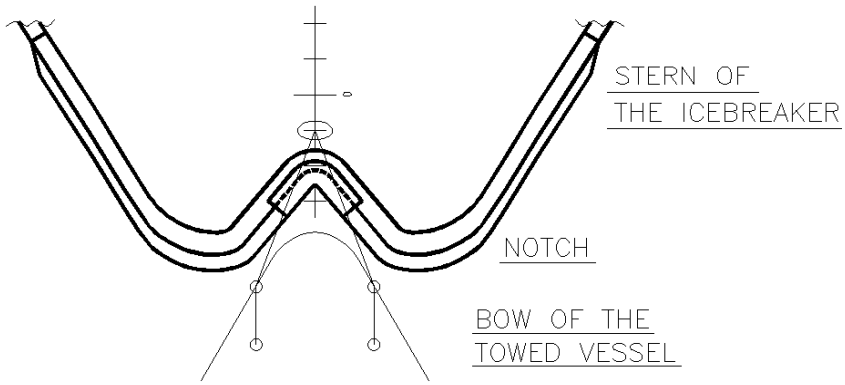

Figure 5. The typical towing arrangement.

A bollard or other means for securing a towline, structurally designed to withstand the breaking force of the towline of the ship, must also be fitted. Operational experience indicates that the bollards can never be too strong and should be properly integrated into the steel structure. As a guideline for bollard design, it should be required that they withstand at least the maximum icebreaker winch force, which is usually 100 – 150 t. The maximum possible force on the bollards is given by the breaking load of the most commonly used cable, a 62mm cable. This has a breaking load of about 200 t.

The ship bow should be suitable for notch towing. Such suitability involves the proper shape of the bow waterline at the height of the icebreaker notch. This height is around 2.5m. If the bow shape is too blunt, it will not fit well into the icebreaker notch. For guidance, the notch shape of IB Otso and Kontio, together with the notch of MSV Botnica, are presented below in Figure 6.

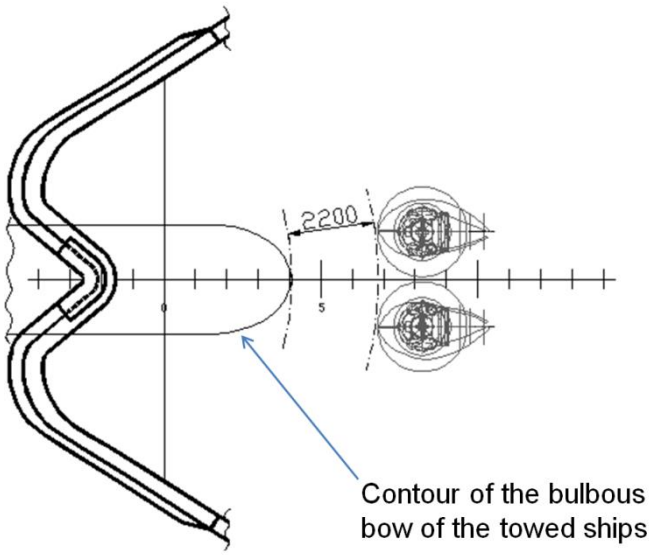

Figure 6a. A sketch of the notch of IB Otso and Kontio, also showing the bulbous bow of the towed ship.

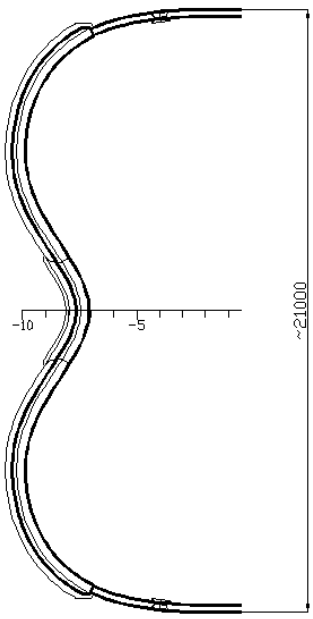

Figure 6b. The notch of MSV Botnica.

Ships with a bulb protruding forward of the forward perpendicular are, however, difficult to tow in a notch. If the towed ship has a bulb, suitability for notch towing also depends on the profile of the bow. The owners should check the appropriate Finnish or Swedish guidelines for winter navigation, to see whether the bulb in question allows notch towing. The bulb will not fit into the notch if the bow is too high, (see Figure 7). If the bow is too high in ballast condition, the ship should be trimmed to lower the bow. When the ship is loaded, the bulb will be low and may then make contact with the icebreaker propellers or rudders. It is recommended that the bulb should not extend more than 2.5 m forward of the forward perpendicular, (see Figure 7). This recommendation should be checked alongside the details

of icebreakers operating in the operational area. For guidance, the stern profiles of two icebreakers are presented in Figure 8.

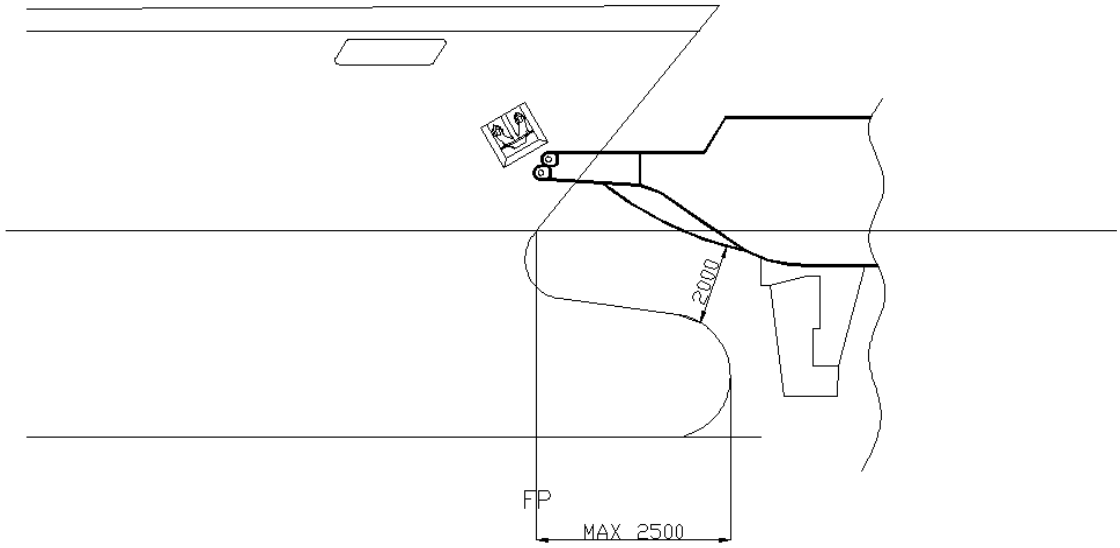

Figure 7a. The extension of the bulb forward of the forward perpendicular with a suitable loading condition.

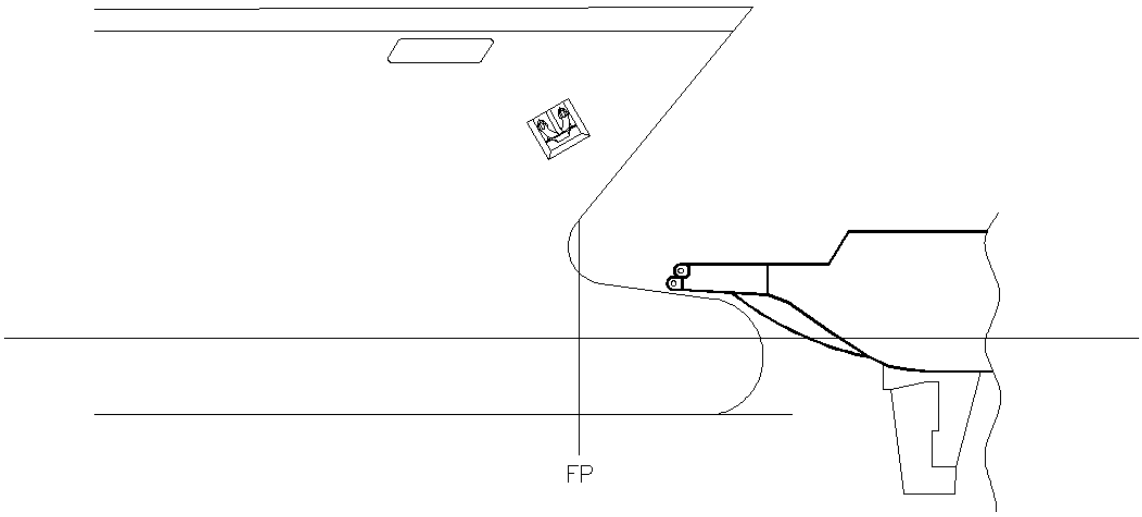

Figure 7b. Problems arising when towing a vessel in ballast with an unsuitable loading condition.

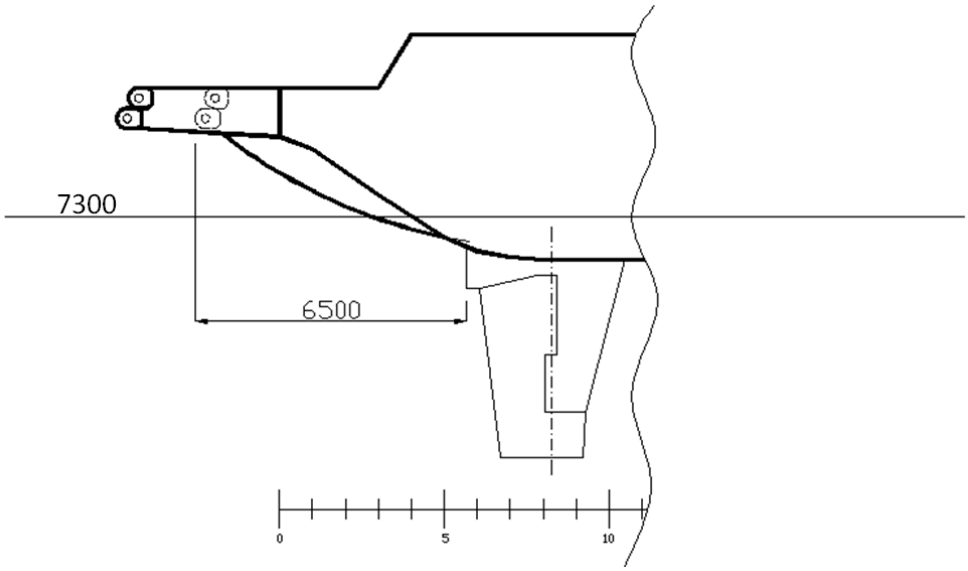

Figure 8a. A sketch of the stern profile of IB Otso and Kontio.

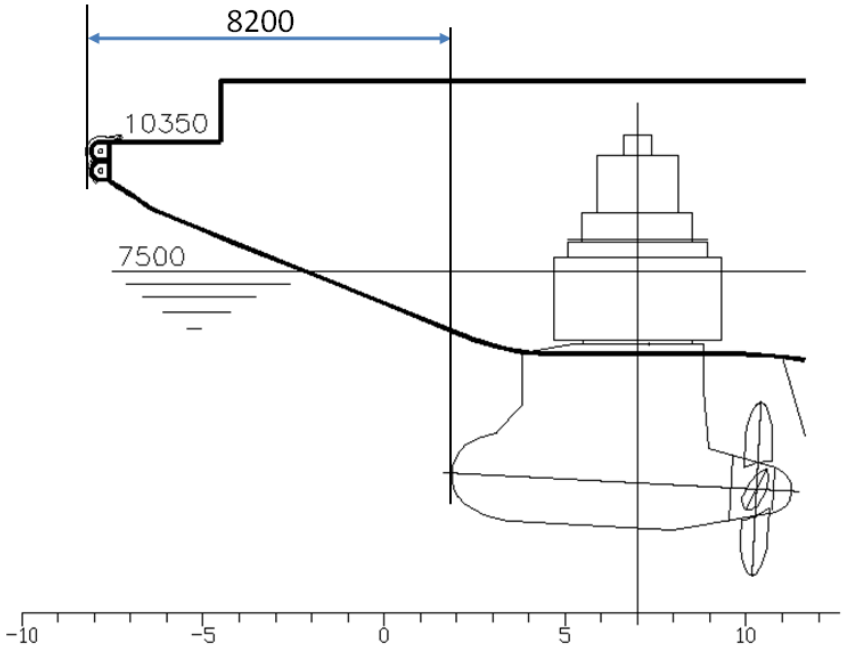

Figure 8b. The stern profile of MSV Botnica.

Some merchant ships have an ice knife fitted above the bulb, (see Figure 9). This ice knife is just a vertical plate which presents a sharp edge against the notch at certain draughts. As these ice knives destroy the fendering at the icebreaker notch, their use is discouraged if efficient icebreaker assistance is to be provided.

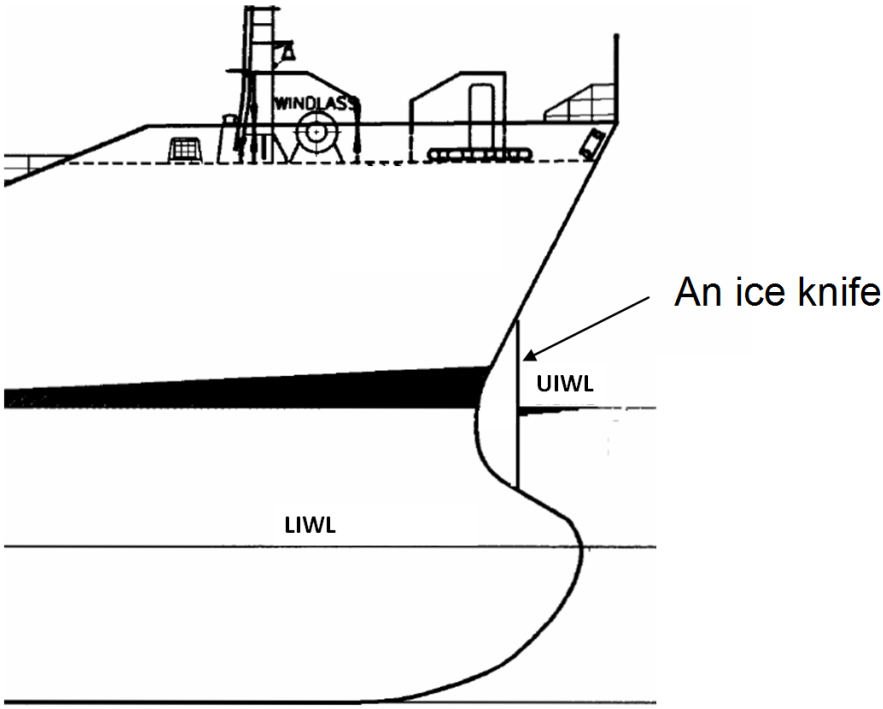

Figure 9. An ice knife is fitted on some ships.

8.6 Reduction in Corrosion Allowance (Section 4.3.2 of the Rules)

The corrosion allowance should be set at 2mm. A 1mm reduction in corrosion allowance can be considered if a recognised abrasion resistant coating is applied. Recognition of an abrasion resistant ice coating is generally based on satisfactory service experience and laboratory tests. As the actual performance of a coating cannot be accurately assessed in laboratory, service experience is particularly important to the assessment of such products. Manufacturers should therefore submit sufficient dry docking reports of ships to which the coating has previously been applied and which have operated in ice conditions, in addition to laboratory test results. The laboratory tests should be carried out using a recognised coating system as a reference.

The surface preparation and coating application are as important as selecting the correct coating and should strictly follow the manufacturer's instructions. In general, the steel surfaces should be abrasive blasted to Sa2½ (ISO 8501-1) or Sa3, with a surface roughness of at least 75µm. If repair painting is applied, similar requirements should be followed – and the old coating should be roughened and the salinity (chloride contamination level) of the surfaces should be checked and must be less than 5µg/cm^2.

When considering laboratory testing, the following testing procedure could be followed:

- Resistance to abrasion (Taber abraser test)
- Impact resistance
- Adhesion strength
- Extensibility (flexibility) e.g. according to ASTM D4145

In addition, the following corrosion tests could be considered:

- Cyclic corrosion test or salt spray test
- Water immersion test
- Cathodic disbondment test.

The test results should be compared with those from a product already recognised by the Classification society. A measure of an abrasion resistance is given by the Taber abrasion test (ASTM D4060), where the rate of abrasion was 160mg/1,000 rounds, using a 1kg weight and CS17 disks.

The acceptance of a 1mm corrosion allowance is subject to adequate documentation submitted to Finnish or Swedish authorities or classification societies.

8.7 Propeller Clearance

An extremely narrow clearance between the propeller blade tip and the stern frame or the bottom of the level ice sheet should be avoided, as a small clearance will place very high loads on the propeller blade tip. In the first case, the loads are caused by ice floes being forced between the stern frame and the propeller and, in the second case, in situations where there is a risk that the propeller will hit large floes, especially when going astern. The stern frame clearance should be at least 0.5 m and the ice clearance should be positive when the level ice thickness is taken as stated in the rules, (see the table in section 4.2.1.).

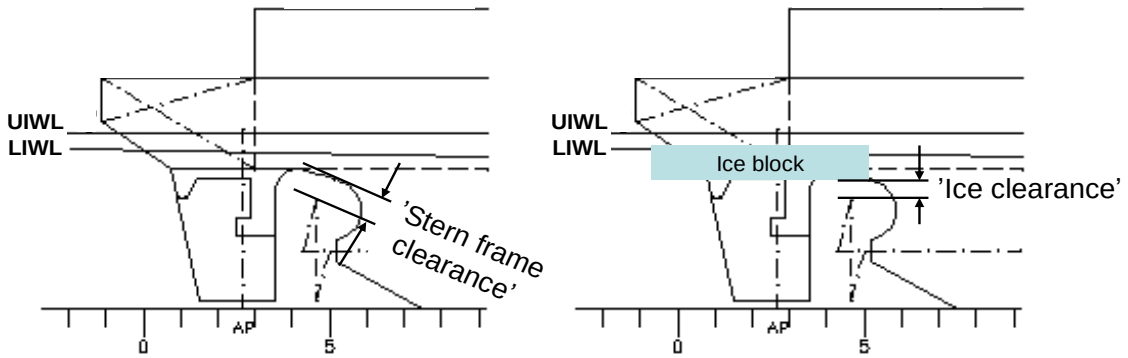

Figure 10. The clearance between the stern frame and the propeller (left) and the ice sheet and the propeller when the ship is at LIWL (right).

8.8 Transom Stern

A wide transom stern extending below the UIWL will seriously impede the capability of the ship to go astern in ice, because the ice will be crushed against the transom. The capability to go astern in ice is most important for higher ice class ships. For this reason, a transom stern should not be extended below the UIWL if this can be avoided. If it is unavoidable, the part of the transom below the UIWL should be kept as narrow as possible, in order to limit the area of the stern against which ice is crushed. The part of the transom stern situated within the ice belt should be strengthened at least to the level of the midship region, because the loading of the midbody mainly arises due to crushing, as the side at the midbody tends to be vertical.

8.9 Bilge Keels

Bilge keels are often damaged or ripped off in ice, (see Figure 11). The reason for this is that ice floes roughly follow the buttock lines when the ship is proceeding in ice. The connection of bilge keels to the hull should be designed to minimise the risk of damage to the hull if the bilge keel is damaged. A construction often described as an 'A-type' bilge keels is recommended due to its strength. An example of this kind of construction is shown in Figure 12. To limit the damage, which occurs when a bilge keel is partly damaged, it is recommended that bilge keels are split into several, shorter independent lengths. The forward and aft parts of the bilge keels should also be pointed towards the oncoming ice when going forward or astern, respectively.

Figure 11. Damage caused by ice on the bilge keel of a ship. Please note that this is an example of damage caused by ice, not an example of good or bad design.

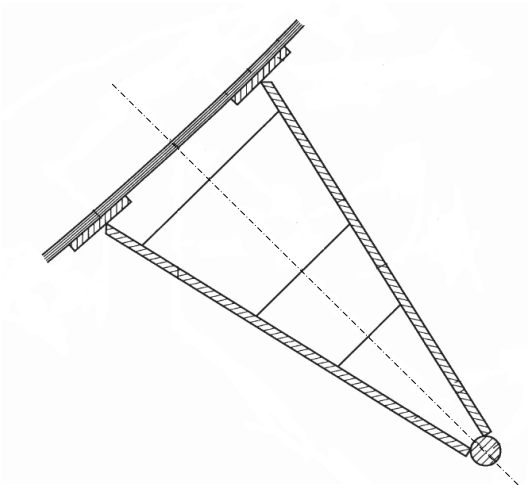

Figure 12. An example of an A-type bilge keel construction.

9 Rudder and steering arrangements (Chapter 5 of the Rules)

9.1 Ice Knife

When going astern, level ice will be broken by the stern and the ice floes will be forced under the ship. The function of the ice knife is to push ice floes approaching the rudder downwards, so that the rudder is not subject to head-on impacts with ice floes and large forces that deviate the rudder out the amidships position occur less frequently. Attention should be paid to the strength and shape of the ice knife with regard to its function. A properly shaped ice knife is shown in Figure 13: the lowest part of the ice knife should be below water for all draughts. However, if it is not intended that the ship will go astern in ice at some draughts, a smaller ice knife could be used. An ice knife is recommended for all ships with an ice class of IA Super or IA.

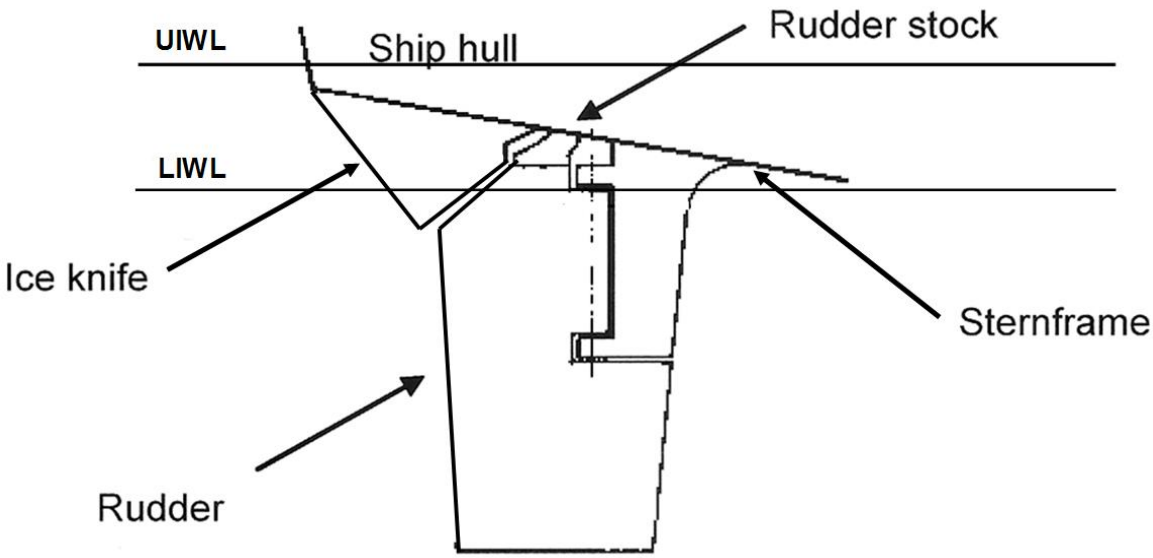

Figure 13. An example of an adequate ice knife design.

If the vessel has a flap-type rudder, special attention should be paid to the design of the rudder in combination with the ice knife, as the flap mechanism is more vulnerable to ice forces.

9.2 Rudder Turning Mechanism

When going astern, a large turning moment will be applied to the rudder, especially if it is allowed to deviate from the amidships position. In order to avoid a situation where the rudder is forced sideways, the operators should pay attention to keeping the rudder amidships when going astern. At the same time, rudder stoppers should be installed in order to avoid excessive movement of the rudder(s).

When the rudder is turned sideways, a great deal of pressure will act on the rudder turning mechanism. The relief valves for hydraulic pressure in the turning mechanism must therefore be effective. The components of the steering gear should be dimensioned to withstand loads corresponding to the required diameter of the rudder stock.

9.3 Bow Thrusters

In general, bow thrusters are not used in ice, because ice floes can damage the thruster blades. Of course, thrusters can be specifically designed for ice loading, as some manufacturers have done. Ice floes can become jammed in the tunnel entrance, making operation of the thrusters impossible. Sometimes, a grid is recommended at the tunnel entrance in order to prevent ice floes from entering the tunnel. On the other hand, this can diminish the thruster's performance when used in open water. Some classification societies may have their own recommendations for the grillage design of bow thrusters and note should be taken of these.

10 Propulsion Machinery (Chapter 6 of the Rules)

10.1 Time domain calculation of torsional response (section 6.5.3.4.1 of the rules)

Current Finnish-Swedish Ice Class Rules (2017) state that when calculating the torsional excitation for propeller shaft, the ice torque increases to maximum torque value during a 360 degree period. This same 360 degree ramp is also used to decrease the excitation back to zero level. In earlier rules this ramp was 270 degrees.

For lowest ice class, IC, the full ice milling sequence is 720 degrees. With 360 degree ramp this means that this sequence consist of only ramp to increase the ice torque (0 -> 360) and a ramp to decrease it (360 -> 720). As the ice torque is modelled as sinusoidal, it follows that the maximum intended ice torque value is not always achieved.

Depending on the number of propeller blades and the excitation case, this leads to 4-14 % lower value of the maximum torque than intended. One possible remedy to this situation is using 270-degree ramp for ice class IC. The FSICR gives the minimum level for design to comply with the requirements of a Finnish-Swedish ice class and Classification Societies can have stricter requirements. For meeting the requirements of Finnish-Swedish ice classes, adherence to the text of FSICR is however sufficient.

10.2 Calculation of blade failure load and the related spindle torque with elastic-plastic FEM (section 6.5.4.1 and 6.5.4.2 of the rules)

The ultimate load resulting from blade failure, because of plastic bending around the blade root, is given in the ice class rules. As an alternative to the simple equation methodology, an elastic plastic FEM can be used to calculate the blade failure load and blade failure spindle torque.

The blade plastic failure should be calculated using load case FEX1. The pressure acts perpendicular to the blade surface on the bent blade. The pressure should be increased gradually until the shaft bending moment begins to drop. The maximum value of the shaft bending moment is then regarded as the design shaft bending moment.

The blade plastic failure should be calculated using load cases FEX2 and FEX3, with elastic-plastic FEM. The ice pressure acts perpendicular to the blade surface on the bent blade. The pressure should be increased gradually until the blade spindle torque starts to drop. The maximum value of the shaft spindle torques for load cases FEX2 and FEX3 is then regarded as the design spindle torque.

Table 3. Load cases for elastic plastic FEM analysis of blade failure load

Load case	Description	Location of contact pressure
Load case Fex1	Constant pressure in the area above 0.6 r/R. Chord wise until 50% towards leading edge and 50% towards trailing edge.	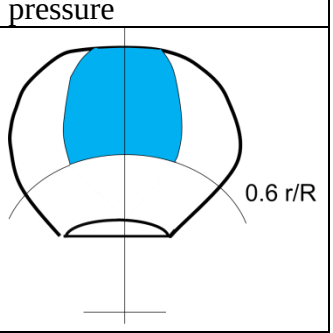
Load case Fex2	Constant pressure in the area above 0.6 r/R but only on the leading edge half of the propeller blade.	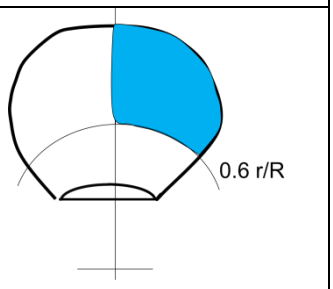
Load case Fex3	Constant pressure in the area above 0.6 r/R but only on the trailing edge half of the propeller blade.	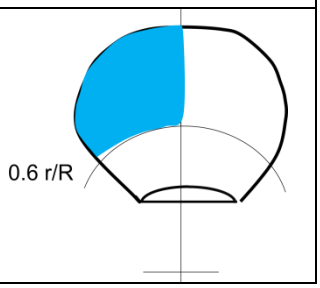

10.3 Safety valves fitted to azimuthing main propulsor units (sections 6.6.5.1 and 6.6.5.2 of the rules)

The dimensioning steering torque of azimuthing main propulsors may be limited according to the rules of the classification society to take into account the effect of torque limiting devices such as mechanical torque limiters or hydraulic safety valves in the steering mechanism.

10.4 Acceptability criterion for static loads (section 6.6.5.4 of the rules)

The safety factor of 1.3 is not meant to be applied to the detail design of bolted connections, for example the pre-stresses in bolts. Rather, classification societies' rules should be applied for these. The loads calculated in sections 6.6.5.2 and 6.6.5.3 are multiplied by the safety

factor and then applied to the thruster body. With these loads the components must be able to maintain operability without incurring damage that requires repair.

10.5 Extreme ice impact loads on azimuthing main propulsors (section 6.6.5.2 of the rules)

The extreme ice impact load calculation given in the rules is based on a moderately sized ice block and common ship operational speed. The same load level can also occur in the case of large ice blocks and lower speeds. For reference in relation to an ice block of this size, the propeller load reference ice thickness H_{ice} can be used as follows, to correspond to the load levels given in the rules.

Table 0-1. Parameter values for ice dimensions and dynamic magnification

	IA Super	IA	IB	IC
Thickness of the design ice block impacting thruster (2/3 of H_{ice})	1.17 m	1.0 m	0.8m	0.67 m
Extreme ice block mass (m_{ice})	8670kg	5460 kg	2800 k g	1600 kg
C_{DMI} (if not known)	1.3	1.2	1.1	1

Table 0-2. Impact speeds for aft centerline thruster

Aft centreline thruster				
	IA Super	IA	IB	IC
Longitudinal impact in main operational direction	6 m/s	5 m/s	5 m/s	5 m/s
longitudinal impact in reversing direction (pushing unit propeller hub or pulling unit cover end cap impact)	4 m/s	3 m/s	3 m/s	3 m/s
Transversal impact bow first operation	3 m/s	2 m/s	2 m/s	2 m/s
Transversal impact stern first operation (double acting ship)	4 m/s	3 m/s	3 m/s	3 m/s

Table 0-3. Impact speeds for aft wing, bow centreline and bow wing thrusters.

Aft wing, bow centreline and bow wing thruster				
	IA Super	IA	IB	IC
Longitudinal impact in main operational direction	6 m/s	5 m/s	5 m/s	5 m/s
Longitudinal impact in reversing direction (pushing unit propeller hub or pulling unit cover end cap impact)	4 m/s	3 m/s	3 m/s	3 m/s
Transversal impact	4 m/s	3 m/s	3 m/s	3 m/s

10.6 Extreme ice ridge loads on azimuthing main propulsors (section 6.6.5.3 of the rules)

The thickness of the consolidated layer of the design ridges are given as information only in Table 6-21 and Table 6-22. The thickness of the consolidated ridge has been taken into account in the formulation of formula 6.48 but it is not used as an input parameter in the calculations.

10.7 Fatigue design and acceptability criterion for fatigue for azimuthing main propulsors

The thruster body and other components are subject to alternating loads. The load distribution should be estimated in order to evaluate the fatigue strength. If there is no proven method of estimating the load distribution, a Weibull type load distribution with a shape factor of 1 can be used to estimate the fatigue load distribution. The maximum load for the distribution used should be the extreme load given in sections 6.6.5.2 and 6.6.5.3.

The number of ice loads is as follows

$$N_t = Z \cdot N_{ice} \cdot C_{nice} \qquad (0.1)$$

Where
C_{nice} is a factor taking account of the thruster body loads on top of the propeller induced loads
If C_{nice} is unknown, a value of 1.2 should be used.

The Miner damage sum should be below 1, with a safety margin of 1.5 in the load level.

10.8 Simplified methodology for estimation of once in a lifetime vibratory loads on the azimuthing thruster (Section 6.6.5.5 of the Rules)

Experience of full-scale performance shows that the blade order vibration of the thruster global modes causes significant vibration if resonance occurs at the rotational speed when

using the propulsion line at high power. In such circumstances, there is high risk of damage to the bearings, the thruster gear and in the structures. A simplified methodology is given below for evaluating vibration amplitude during resonance. The response can then be used to evaluate the risk of damage. Resonant vibration should be avoided at high power revolutions.

The methodology consists of the following steps.

1. Estimation of the global natural frequencies of the thrusters in the longitudinal and transverse direction and the propeller revolutions at blade order resonances.
2. Estimation of propeller blade order excitation due to propeller-ice interaction.
3. Estimation of the vibratory response based on the estimated dynamic magnification factor.

Estimation of the natural frequencies and modes

An azimuthing thruster tends to have lateral and longitudinal vibration modes as described in Figure 14.

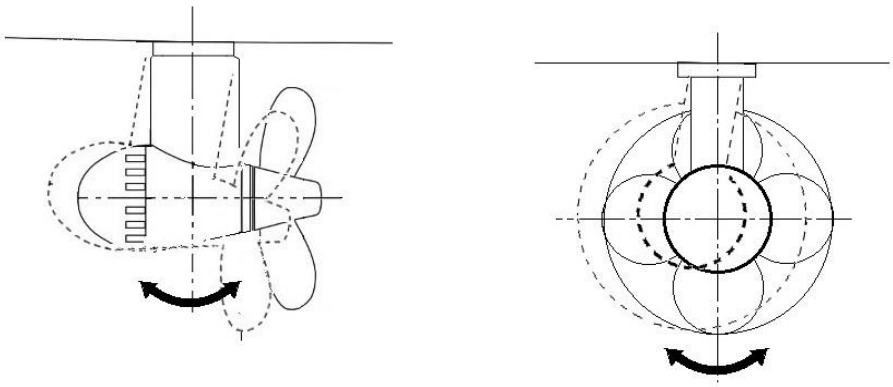

Figure 14. Schematic figure of typical longitudinal (left) and transversal (right) natural modes of the thruster.

In the estimation of thruster global natural frequencies in the longitudinal and transverse direction, account should be taken of the damping and added mass due to water. In addition, the effect of the ship-hull attachment stiffness should be modelled.

Estimation of blade order excitation on propeller due to ice

The dynamic excitation loads are derived from the propeller ice loads presented in the ice class rules. The propeller-induced load sequences are estimated to be a continuous series of half sine shape impacts. The blade order component of that series is applied as sinusoidal excitation of the propeller. The excitations are illustrated in Figure 15 and the formulae used for defining the excitation amplitude are given below.

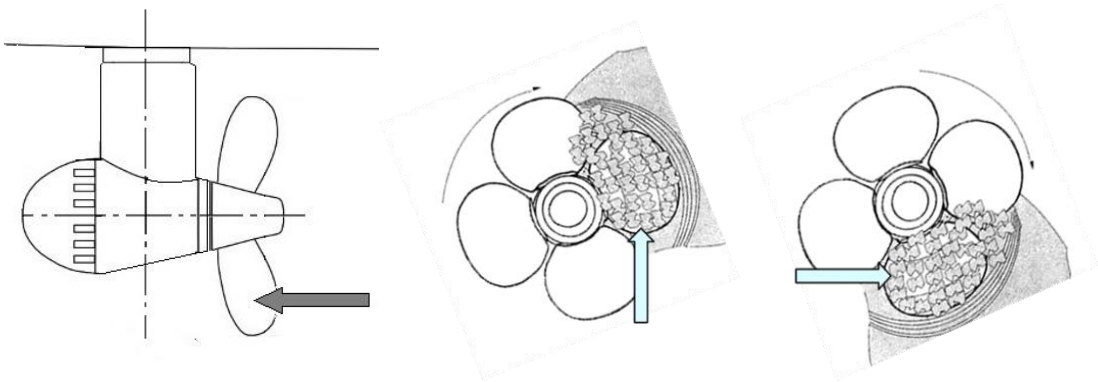

Figure 15. Location of the excitation on the blade.

Axial blade order excitation amplitude	$F_{bla} = F_b$ or F_f whichever is greater
Vertical blade order excitation amplitude	$F_{blv} = 0.75*Q^*_{max}/(0.7*R)$
Lateral blade order excitation amplitude	$F_{blh} = 0.75*Q^*_{max}/(0.7*R)$

Where: F_b and F_f are the maximum backward and forward blade forces calculated using the ice class rule equations.
Q^*_{max} is the maximum ice torque calculated at the relevant rotational speed, using the ice class rule equation.
R is the propeller radius

If the thrusters have blade order vibratory resonance at the operational revolution range, the extreme loads at the resonance can be estimated using FEM, or with the simplified method described below.

The sinusoidal extreme excitation is for any direction:

$$F_{bl}(\varphi) = F_{bl} \cdot C_{q1} \cdot \sin(Z * \varphi + \alpha_1) \text{ [kN]}$$

Where	F_{bl}	is F_{bla}, F_{blv} or F_{blh} depending on the direction of the vibration
	C_{q1}	is first blade order Fourier component
	φ	is the angle of rotation
	α_1	is the first order phase angle of excitation component
	Z	is the number of blades

Table 4. Blade order Fourier coefficients for sinusoidal excitation of the propeller

	C_{q1}	α_1
Z=3	0.375	-90
Z>3	0.36	-90

Estimation of the response at resonance

In the case of continuous sinusoidal excitation, the dynamic magnification factor is dependent on the damping. Damping during thruster vibration is not very well known when propeller/ice interaction occurs. However, estimates for open water condition may be used.

The response force at a resonance taking account of dynamic magnification for transverse, longitudinal and vertical vibration is then.

$$F_{bl\,resp}(\varphi) = C_{DM} \cdot F_{bl}(\varphi)$$

where :

F_{bl}	is the excitation force defined earlier
C_{DM}	is the dynamic magnification factor for thruster body vibration

The dynamic magnification factor C_{DM} may have different values for vibration in different directions. The typical value for open water is 10 – 20.

Application point of the response force

For the strength evaluation of the thruster, the response force should be placed at the location of the thruster vibratory mass, typically at propeller shaft level, see Figure 16.

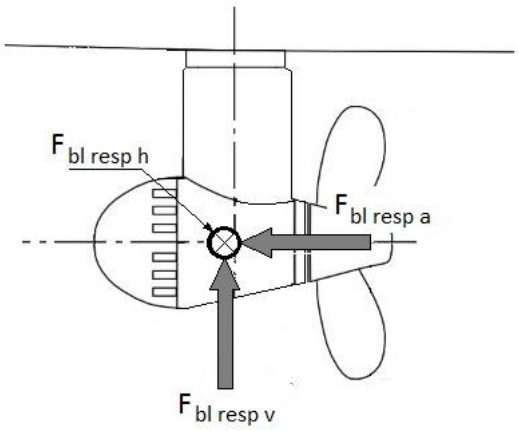

Figure 16. Schematic figure showing the location of the response force for longitudinal, transverse and vertical vibration.

10.9 Local ice pressure on azimuthing thruster

The local strength of the thruster body tends to be sufficient when the thruster is designed for global loads. However, local ice pressure design can follow the principles for rudder design presented in chapter 5 of the ice class rules. It is assumed that the thruster will encounter bow region pressures, since thrusters are usually strongly exposed to ice contact.

11 Miscellaneous Machinery Requirements (Chapter 7 of the rules)

11.1 Sea Inlet and Cooling Water Systems

The principle behind section 7.2 of the Finnish-Swedish Ice Class Rules involves ensuring the safe operation of machinery in ice conditions. According to item 4 "*a pipe for discharge cooling water, allowing full capacity discharge, shall be connected to the chest".* This promotes the melting of ice pieces and slush that may have entered the sea chest. Reference is also made to IMO MSC/Circ. 504 "*Guidance of Design and Construction of Sea Inlets under Slush Ice Conditions"*.

If the vessel is designed to operate in southern latitudes, with a very high cooling system capacity due to high sea water temperatures, it may be appropriate to design the capacity of the cooling water re-circulating line in accordance with the actual required cooling water capacity of the machinery in ice conditions, when the sea water temperature is much lower. The amount of water entering the sea chest through the recirculation line should enable the full capacity discharge of sea water required for the cooling of the machinery when sailing in ice.

Box coolers have functioned well in ice and are thus also an acceptable technical solution for ensuring the supply of cooling water when navigating in ice.

12 General Suitability for Winter Conditions

When designing a ship for winter navigation in the Northern Baltic, account should also be taken of certain issues other than those mentioned in the rules. The low ambient temperature should be borne in mind in particular.

12.1 Low Ambient Temperature

In the northern Baltic Sea area, the air temperature is below 0°C for much of the winter and may occasionally fall to around -30°C, and for short periods of time temperatures as low as -40°C can be encountered. This should be taken into account when designing structures,

equipment and arrangements essential to the safety and operation of the ship. Matters to be borne in mind include e.g. the functioning of hydraulic systems, the danger of water piping and tanks freezing, the start-up of emergency diesel engines, the strength of materials at low temperature, etc.

The following temperatures are given for reference in the Baltic Sea area

- Ambient temperature: -30°C
- Sea water temperature: -2°C

Equipment and material exposed to the weather should be capable of withstanding and remaining operable at the design temperature for long periods. (Note: There have been no reported cases of brittle fracturing when material grades designed for normal worldwide service are used for winter navigation in Baltic Sea Areas).The propulsion and auxiliary machinery should be capable of full operation in ambient conditions, as required in winter conditions. For example, the engine suction air should be sufficiently heated before entering the engine, or other alternative solutions, such as a specially adapted waste-gate, should be considered.

Appendix 1

INSTRUCTIONS FOR THE APPLICATION OF A LETTER OF COMPLIANCE

If the required engine power of the vessel has been determined by model tests, a letter of compliance issued by the Finnish Transport Safety Agency or by the Swedish Transport Agency is required. Such a letter of compliance should be drawn up for the individual ship in question. For this purpose, the following information should be forwarded to the Administration for each individual ship:

- The name of the vessel, if known
- The call sign of the vessel, if known
- The IMO number of the vessel
- The main dimensions of the vessel
- A copy of the final lines drawing of the vessel
- The main engine type and the total engine output the propulsion machinery can continuously deliver to the propeller(s) of the vessel
- Reference to the model test report
- The resistance of the vessel and available net thrust of the propulsion machinery in a brash ice channel, as defined in section 3.2.5 of the Finnish-Swedish Ice Class Rules, 2017.

Appendix 2

GUIDELINES FOR THE CALCULATION OF PROPELLER THRUST FOR OPEN AND NOZZLE PROPELLERS

It has been suggested that an alternative power requirement for nozzled propellers should be accepted instead of the one given in the Finnish-Swedish ice class rules, based on a better propeller thrust than for an average propeller. Naturally, the vessel must fulfil the basic requirement of 5 knots in a specified brash ice channel (the thickness of which varies with the ice class), but the power used to produce the thrust must be optimised. Two more direct ways of calculating or determining thrust are examined below – using propellers in nozzles and the direct determination of propeller thrust.

The basic assumption of the rules is that the bollard pull T_B of the vessel can be determined as

$$T_B = K_g \left(P \cdot D_P\right)^{2/3}, \tag{1}$$

where K_g is the efficiency factor of bollard pull, being 0.78 for a single CPP and 0.98 for a twin CPP, P is the ship power and D_P is the propeller diameter. As the requirement in the rules is a speed of 5 knots, the concept of net thrust is used in the following calculations. The net thrust T_{NET} takes account of the open water resistance R_{OW} and the change in propeller thrust T at speed v_1 (the K_T curve decreases as J i.e., the speed, increases). The force balance in ice at speed v_1 is (R_{CH} is the rule channel resistance)

$$(1-t_1)T(v_1) = R_{OW}(v_1) + R_{CH}(v_1), \tag{2}$$

where t_1 is the thrust deduction factor at speed v_1. This basic equation gives the definition of net thrust as

$$T_{NET} = (1-t_1)T(v_1) - R_{OW}(v_1). \tag{3}$$

This definition can be expressed with the bollard pull value and the propulsion coefficients, assuming that the propeller absorbs full power at both velocity points as

$$T_{NET} = \frac{1-t_1}{1-t_0} \cdot \frac{K_T(J_1)}{K_T(0)} \cdot \left(\frac{n_1}{n_0}\right)^2 T_B - R_{OW}(v_1) = \frac{1-t_1}{1-t_0} \cdot \frac{K_T(J_1)}{K_T(0)} \cdot \left[\frac{K_Q(0)}{K_Q(v_1)}\right]^{2/3} \cdot T_B - R_{OW}(v_1) \tag{4}$$

where J_1 is the advance coefficient and n_1 the RPM at speed v_1, and t_0 is the thrust deduction factor at the bollard condition and n_0 the propeller RPM at the bollard condition. The RPM's can be determined using the torque coefficient, from the equations (ρ is the density of water)

$$P = K_Q(0) \cdot 2\pi\rho \cdot n_0^3 \cdot D_P^5$$
$$P = K_Q(J_1) \cdot 2\pi\rho \cdot n_1^3 \cdot D_P^5 \qquad (5)$$

In this case, the crucial assumption is that the propeller absorbs full power at the bollard condition and at a speed of 5 knots. This assumption is adequate for diesel-electric drives and CP propellers, but it is not adequate for slow speed engines with a FP propeller and separate, more detailed calculations must be performed.

The basic requirement in the rules is that, at a speed of 5 knots

$$T_{NET} = R_{CH}\,, \qquad (6)$$

from which the power can be calculated. As both the T_B and the RPMs include power, this solution is somewhat complicated. As two points on the T_{NET}-curve are known (T_{NET}=T_B when v=0 and T_{NET} = 0 when v = v_{OW}, open water speed), the situation can be simplified, if a parabolic curve fit is fitted between these points as follows:

$$T_{NET} = \left(1 - \frac{1}{3}\frac{v}{v_{OW}} - \frac{2}{3}\left(\frac{v}{v_{OW}}\right)^2\right) \cdot T_B\,. \qquad (7)$$

Eq. (4) shows that, to determine the net thrust precisely, the open water resistance is needed in addition to the propeller thrust. Based on (3), an estimate can be made of the thrust needed at a speed of 5 knots, if the typical values for open water resistance and the thrust deduction coefficient are used. For a certain, limited number of ships these have been estimated to be $0.12 \cdot H_M{}^{-1.3}$ % of R_{CH} ([H_M] = m) and t = 0.15, respectively (for ice class IA Super, the H_M is taken to be 1.3 m and for azimuthing thrusters t = 0.13). These lead to the requirement that the thrust at a speed of 5 knots must be *factor*· R_{CH}, where the factor is given in Table 2 of Chapter 7.4.1. This value is not a general figure, which means that generalisations of this kind cannot be made in principle. The actual and verified values for R_{OW} and t can be used in any situation.

Another question is posed by propellers in nozzles. At low speeds, nozzle propellers create higher thrust than open propellers of a corresponding size. As a rule of thumb, this extra thrust is given as 30% of the corresponding open propeller thrust. These facts can be fed into an equation if the net thrust, using e.g. (7), is first denoted as

$$T_{NET} = K_v \cdot T_B\,. \qquad (8)$$

Then, the extra thrust is taken into account using the factor K_N, and the bollard pull of the nozzled propeller is (T_B as in (1))

$$T_{B,N} = K_N \cdot T_B \text{ and} \qquad (9)$$

$$T_{NET} = K_v T_{B,N} = K_v K_N T_B \qquad (10)$$

By starting with the basic equation (6), we now get

$$\begin{aligned} R_{CH} &= T_{NET} \\ &= K_v(v_1) \cdot T_{B,N} \\ &= K_v(v_1) \cdot K_N \cdot T_B \\ &= K_v(v_1) \cdot K_N \cdot K_g \cdot (P \cdot D_P)^{2/3}. \end{aligned} \tag{11}$$

In the rule, K_v is assumed to be 0.8. Thus, the power requirement for a nozzle propeller is

$$P_N = \frac{1}{D_P}\left(\frac{R_{CH}}{K_v K_g K_N}\right)^{3/2} = \frac{K_e}{D_P}\left(\frac{R_{CH}}{K_N}\right)^{3/2} = \frac{1}{K_N^{3/2}} \cdot P_{OPEN}. \tag{12}$$

This equation shows that, in theory, if the open water propeller has a diameter which is $K_N^{3/2}$ times larger than (i.e. about 1.48 times) the nozzle propeller's diameter, the thrusts are the same. Or, to put it slightly differently, the power of the nozzle propulsion can be around 70% of the corresponding open propulsion, and the performances are the same.

Appendix 3

GUIDELINES FOR BOLLARD PULL TESTS FOR DETERMINING THE THRUST OF THE PROPELLER(S)

The R_{CH} is defined as the channel resistance at a speed of 5 knots in a broken channel of a certain thickness. The propeller thrust must be greater than this channel resistance plus open water resistance.

Regulation 3.2.5 (in the Finnish version of the Rules) or Chapter 3, section 7 (in the Swedish version) allows for alternative measures, in order to comply with the above requirement. A bollard pull test can thus be accepted as proof that the powering requirement has been fulfilled.

1 Bollard Pull Test 1

By definition, this test is performed at zero speed. To achieve the correct test result, several factors must be considered, e.g. water depth, towline length etc. When conducting these tests, a bollard pull testing procedure by a Classification Society, or the *Bollard Pull Trial Code* by Steerprop, should be followed.

The bollard pull should be measured by a calibrated ‘load cell’ with a deviation within a measuring range of less than ±2 %.

The measured bollard pull should be no less than that given in Tables 1 and 2. Account must also be taken of open water resistance R_{OW} and the factor t. The actual and verified values for R_{OW} and t can always be used.

2 Bollard Tow Test 2

In practice, this type of test is probably the most convenient one. The vessel is connected to a tug and the two vessels perform a ‘tug of war’ pull, moving at a minimum speed of 5 knots in the direction of the test ship.

The force should be measured on the tug either by using:

- An independent (external) ‘load cell’ with a deviation within the measuring range of less than ±2 %. The measured tow pull should be no less than $1.0 \cdot R_{CH}$
- The integrated ‘load cell’ on the towing winch. The measured tow pull should be no less than $1.1 \cdot R_{CH}$.

Appendix 4

GUIDELINES FOR THE VERIFICATION OF A SHIP'S PERFORMANCE FOR ICE CLASSES THROUGH MODEL TESTS

In the Finnish-Swedish Ice Class Rules, powering requirements refer to a certain required level of a ship's performance. The ship's performance is set as the ship's capacity to proceed at a constant speed of 5 knots in old brash ice channels of a certain thickness. For ice class IA Super, it is also assumed that there is a 10cm thick consolidated layer of ice on top of the channel. When verifying performance through model tests, the following points 2 to 7 should be checked:

1 Definition of the Design Point and Notation

The design point to be checked by the model tests is that the vessel can proceed at five knots in the brash ice channel specified for each ice class. This definition can be used in the propulsion tests, if the propulsion thrust to be obtained at full scale is modelled. If, however, resistance tests are conducted, then the total resistance in ice, R_{iTOT}, is measured. In the ice class rules, it is assumed that the superposition assumption is valid. This states that the pure ice resistance, R_i, and open water resistance, R_{OW}, can be superimposed as

$$R_{iTOT} = R_i + R_{OW}.$$

Here, the pure ice resistance is either the channel resistance (ice classes IA, IB or IC) or the channel resistance plus level ice resistance (ice class IA Super). Now, the ice class requirement is

$$T \cdot (1-t) \geq R_{iTOT} = R_i + R_{OW} \ ,$$

where T is the thrust that the propeller develops at 5 knots and t is the thrust deduction factor at 5 knots (and in principle at the overload condition – the open water thrust deduction factor can, however, be used).

2 The Model Testing Procedure

The rule requirement is that the ship achieves at least 5 knots in a channel defined separately for each ice class. The rule resistance in the specified channel is given in the rules. The aim of the model tests is to determine the channel resistance and the total resistance in the channel i.e. the channel and open water resistances, and then show that there is enough net propulsion thrust (i.e. taking account of the thrust deduction factor) available to overcome this resistance.

The results of the model tests should show the channel resistance, open water resistance at the same speed and the net thrust of the proposed propulsion arrangement at full scale at the specified speed. A propulsion test using stock propellers showing a self-propulsion point at a certain speed is insufficient. This is also reflected in the reporting requirements.

3 The Geometry of the Ice Channel

The rule-based channels have been given a thickness with respect to their mid part (H_M = 1m for IA, 0.8m for IB and 0.6m for IC), and their profile thickens towards the edges by a gradient of 2^0, see Figure 1. This profile is based on channel measurements in the fairways of northern ports in the Gulf of Bothnia.

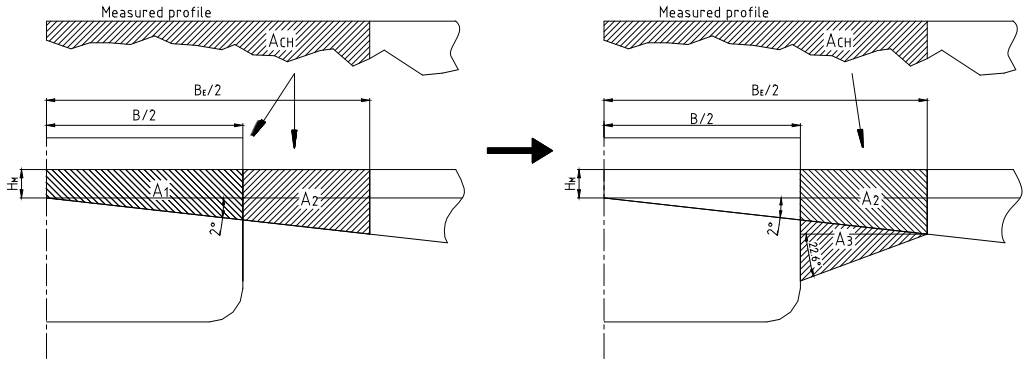

Figure 1. The geometry of a "real" brash ice channel profile and the corresponding profile of a rule channel before the ship's passage, and the assumed behaviour of the ice during the passage. The relations between the cross-sectional areas are: $A_{CH} = A_1 + A_2 = A_2 + A_3$.

However, it is difficult to achieve a channel profile in model test conditions resembling the ones referred to in the rules. An average channel thickness, H_{av}, may thus be used, which is affected by the breadth of the ship, as follows

$$H_{av} = H_M + 14.0 \cdot 10^{-3} B \qquad (1)$$

where B is the beam of the vessel.

The width of the ice channel should be 2 x B, with level ice at the sides. The thickness profile of the ice channel should be measured at a breadth of 1.6 x B.

The channel profile should be measured at sufficiently small intervals (of around 10 … 20cm) in order to ensure that the cross sectional area of the ice channel is accurately determined. In the longitudinal direction, the step of cross sectional profiling should be a maximum of 2m.

The channel should be 100% covered with ice, so that there are around two layers of ice fragments on top of each other.

4 The Friction Coefficient

At full scale, the friction coefficient between ice floes and the hull, μ, ranges from 0.05 for new ships to 0.15 for corroded hull surfaces. In ice model tests, a friction factor of 0.05 – 0.1 is usually applied to the model.

If a friction coefficient of less than 0.1 is used in the model tests to determine the ice channel resistance R_{CH}, the engine power and the propeller thrust should be selected so that the vessel is able to sail at a speed of 5 knots with a friction coefficient of 0.1 at full scale. Correction of the resistance to account for a different friction coefficient can be done using the following formula:

$$R_{CH(\text{with } \mu_{\text{target}})} = \left[\left(0.6 + 4\mu_{\text{target}}\right) / \left(0.6 + 4\mu_{\text{actual}}\right)\right] R_{CH(\text{with } \mu_{\text{actual}})},$$

where μ_{actual} is the actual friction coefficient measured in the tests and μ_{target} = 0.1.

5 Model Tests for Ice Class IA Super

The preparation of a consolidated ice layer for ice class IA Super is difficult, since it often becomes very inhomogeneous (the fragments are very small in a natural setting, but are often larger in the test channels) or too intact (resembling natural ice). For this reason, these tests could be carried out by superposing the level ice resistance and the channel resistance.

6 Determination of the Propulsion Power at Full Scale

When R_{CH} has been determined using model tests, and this resistance is used to verify compliance with the speed requirements for the applicable ice class, the actual propeller thrust at full scale should be applied using the actual propeller and engine data, instead of using the rule formulae, in order to ensure that the propulsion system is able to produce the thrust required to overcome the channel resistance. This is particularly important for low-speed, direct-drive diesel engines with an FPP. If it is observed that the ice is interacting extensively with the propeller during the tests, the resulting losses in propulsion must be taken into account in the calculation of the full scale power and speed of the ship. For the verification of the model scale bollard pull, the corresponding full-scale bollard pull must be given for the propeller to be used on the ship.

7 Model Test Reporting

The model test report should include the information given in the Annex to these Guidelines.

Annex to Appendix 4

Required Information in a Model Test Report

The following information should be included in a model test report submitted in order to have the engine power accepted in accordance with section 3.2.5 of the Finnish-Swedish Ice Class Rules, 2017.

1. General description of the ice model basin and the model ice

2. Ship model
   2.1 Main particulars of the ship, including displacement and deadweight
   2.2 Main particulars of the model
   2.3 Description of the ship geometry, with hull lines drawing
   2.4 Model scale

3. Propulsion
   3.1 Description of the ship propulsion system, including the net thrust and bollard pull curves
   3.2 Description of the model propellers
   3.3 The bollard pull versus the RPM curve of the ship model

4. Test program and procedures
   4.1 Model test program
   4.2 Hull friction coefficient measurement procedure
   4.3 Description of the measurement system for propulsion values
   4.4 Description of the measurement system in resistance and/or propulsion tests
   4.5 Analysis procedures

5. Model ice
   5.1 Data on the parent level ice thickness
   5.2 Parent level ice strength (bending strength and also, preferably, compressive strength)
   5.3 Description of the method for producing the channel
   5.4 Measurement of the channel profile at sufficiently small intervals (intervals of around 10 … 20cm) to allow the accurate determination of the cross sectional area of the channel. In a longitudinal direction, the cross sectional profiling interval should be 2m at most. The methods used in this measurement should be described.
   5.5 From each cross section, an average channel thickness should be computed based on a channel width which is the breadth of the ship and 1.6 times the ship's breadth.
   5.6 Description of the porosity of the brash ice. Photographs from above the channel, to provide a picture of the brash ice coverage along the entire length of the channel.
   5.7 For the ice class IA Super, it is assumed that a consolidated layer 10cm in thickness (full scale) is lying on top of the brash ice. If this layer is modelled, the modelling procedure should be described, including the manner in which it was produced and how its thickness and strength were measured.

6. Test results
   6.1 Measurements of the hull coefficient for friction with ice
   6.2 The time histories of the model speed, propeller thrust, torque and RPM derived from each test. Indication of the part of the time history based on which the final values were calculated.
   6.3 Description of the behaviour of the brash ice in the channel. A measurement of the cohesion and internal friction angle or some other parameters describing the strength of the brash ice should be performed, or an earlier result for these quantities should be produced in a similar manner based on a brash ice channel.
   6.4 Photographs of the channel made by the vessel immediately after the tests, from above.
   6.5 The deduced (from time histories referred to in section 6.2 above) and calculated model propulsion, total model resistance and ice resistance values
   6.6 Full-scale resistance and engine power prediction, including a description of the extrapolation method. An estimate must be given of the accuracy of the result obtained by extrapolation.

7. Other information
   7.1 Estimate of the resistance of the model in open water.
   7.2 Calculation of the required engine power according to the Finnish Swedish Ice Class Rules, 2010, with input data.